WRO
WORLD ROBOT OLYMPIAD ™

RoboMission

Elementary Building Instructions

Season 2023

CONNECTING THE WORLD
MARINE LIFE PRESERVATION

Building instructions for the game field elements.

Version: January 15th 2023

WRO International Premium Partner

LEGO education

1

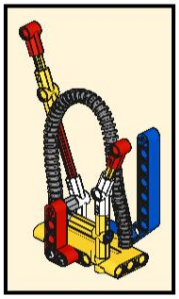

4x

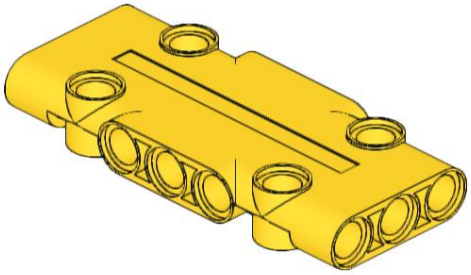

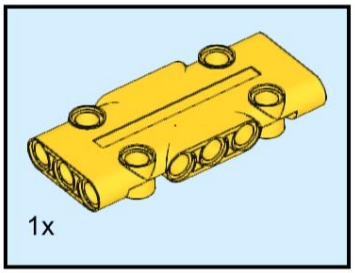

2

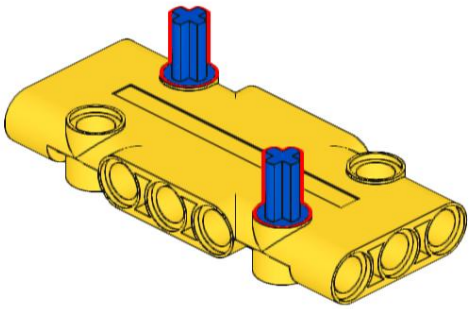

3

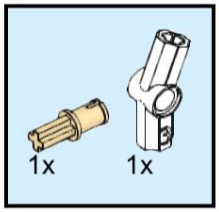

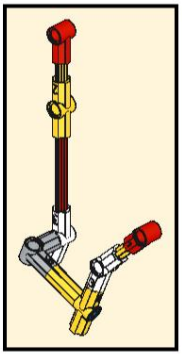

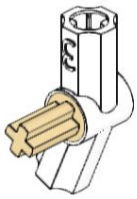

4

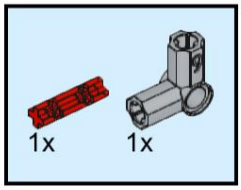

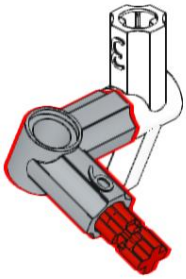

5

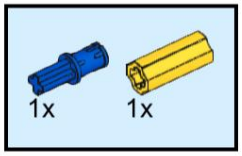

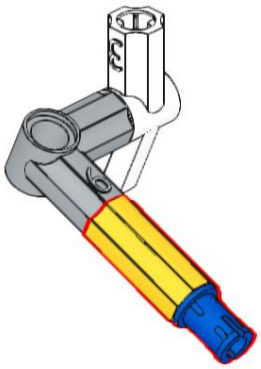

6

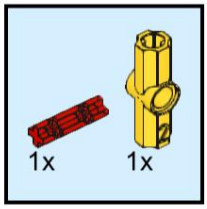

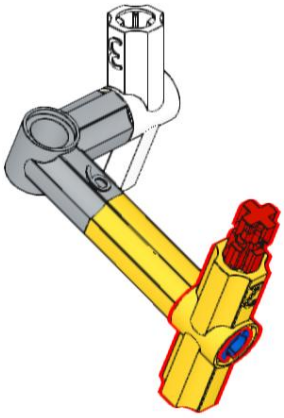

7

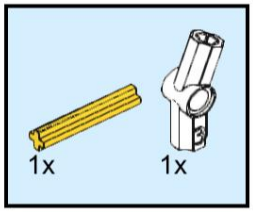

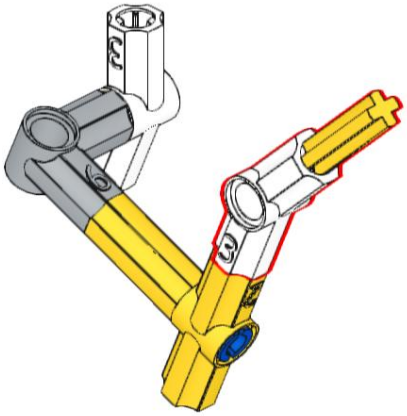

8

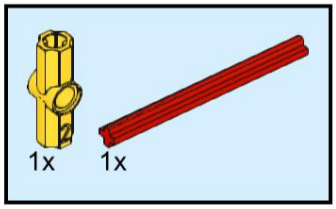

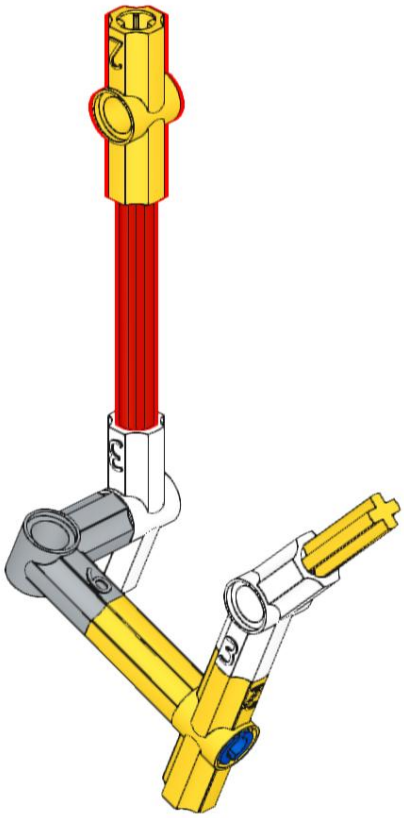

9

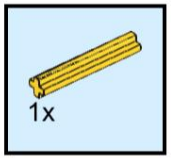

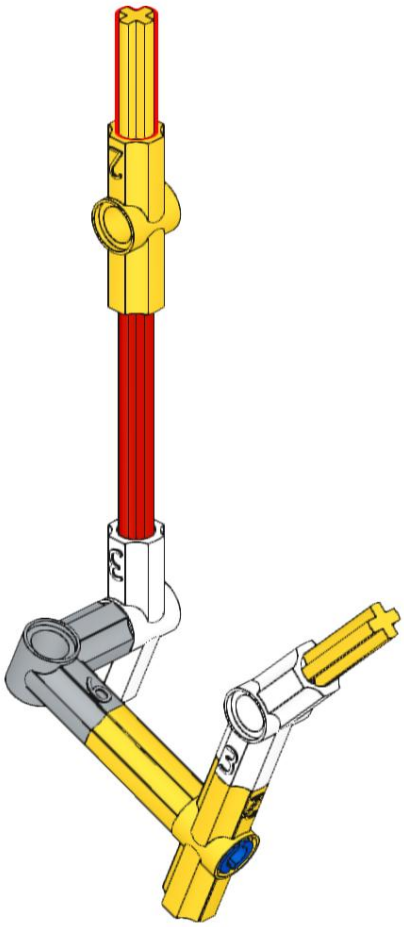

10

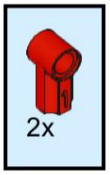

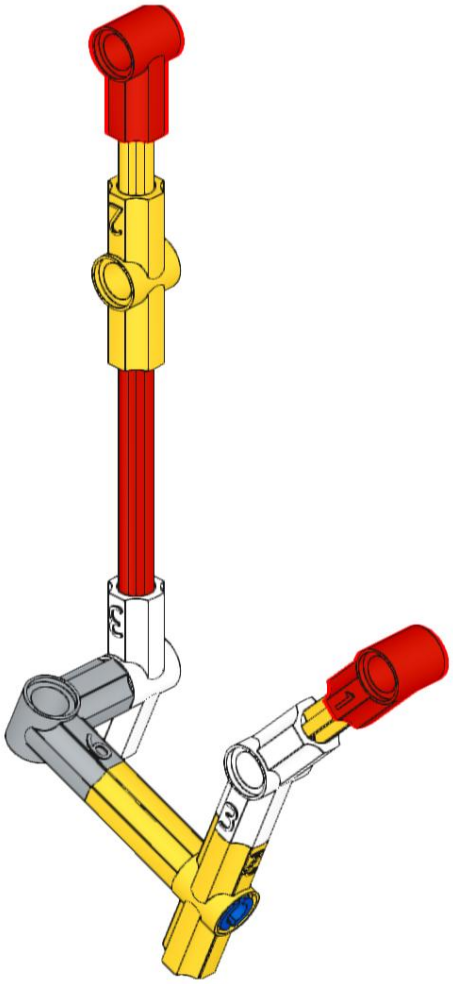

11

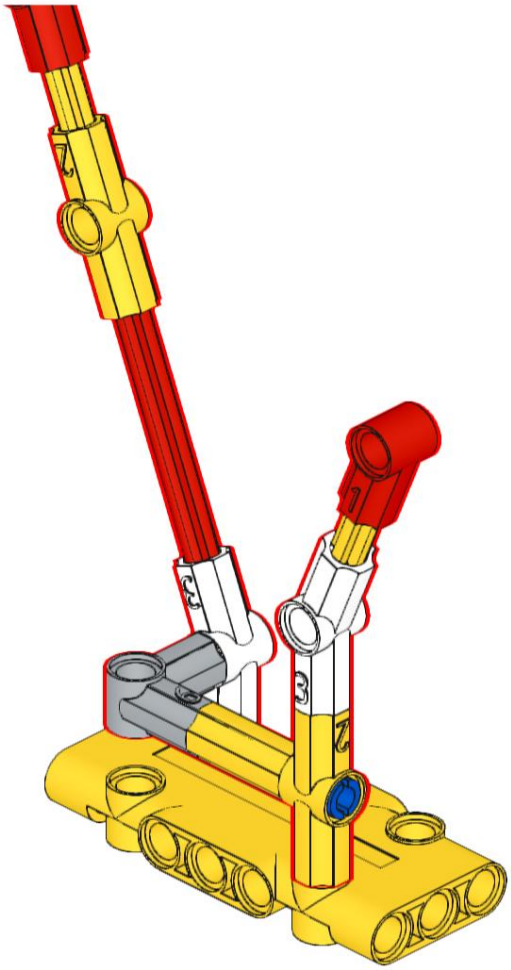

12

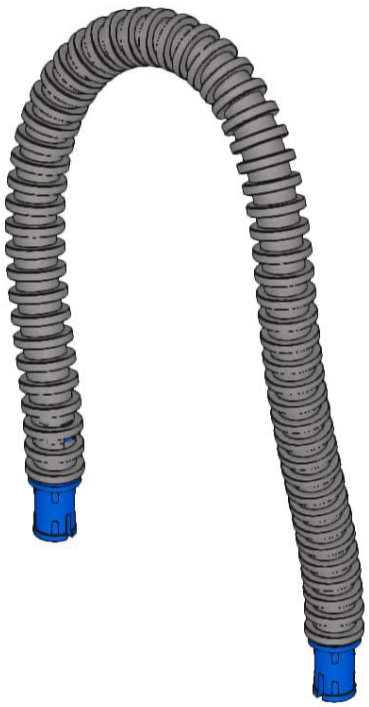

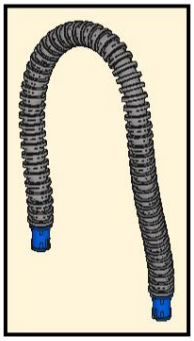

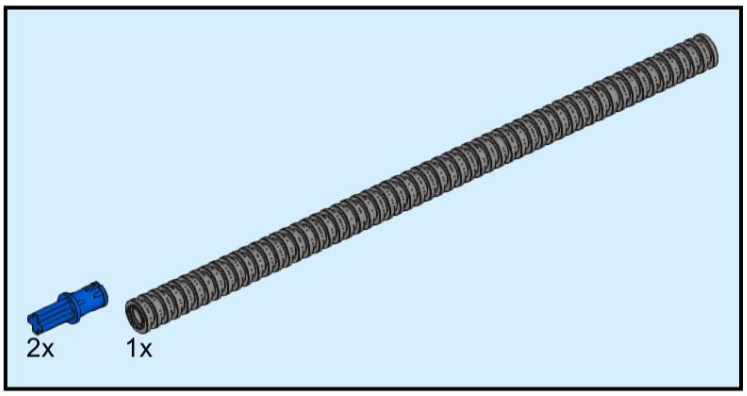

13

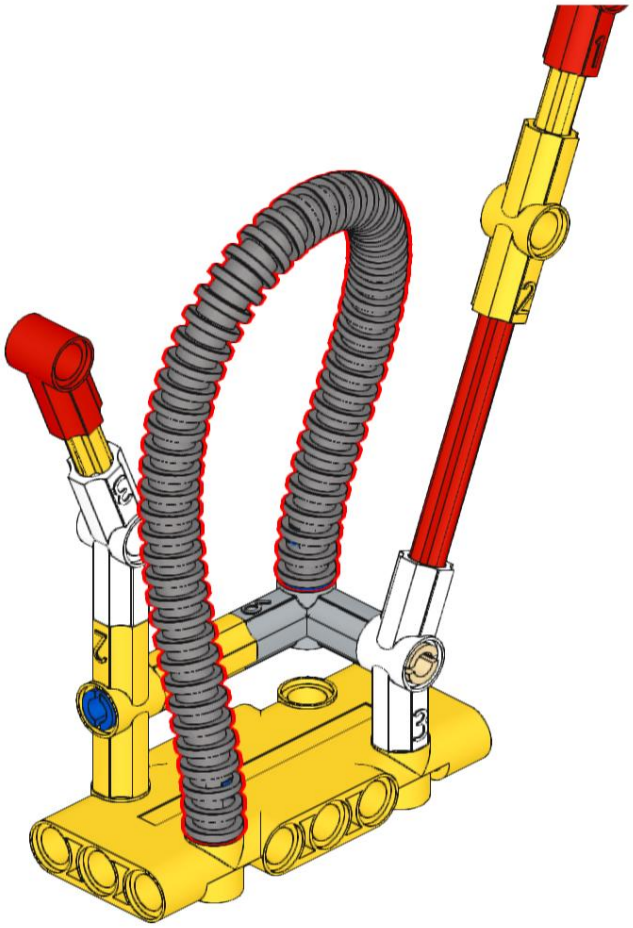

14

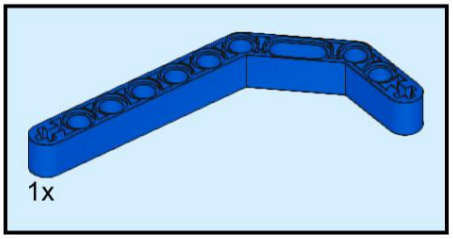

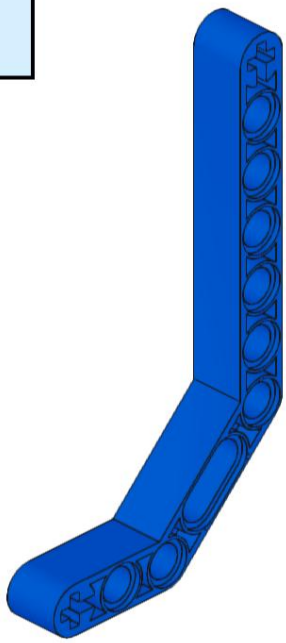

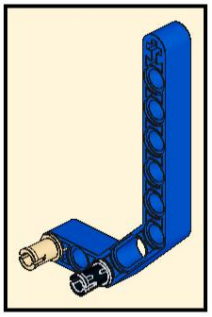

15

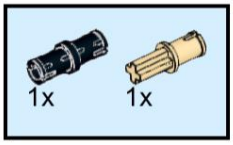

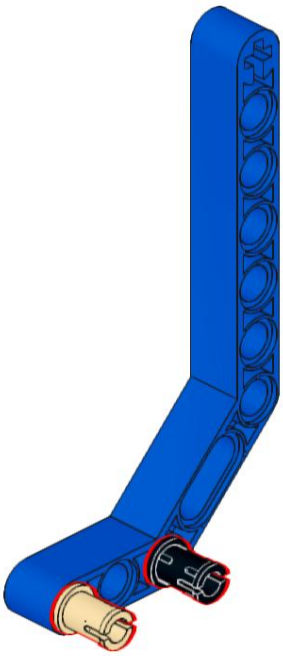

16

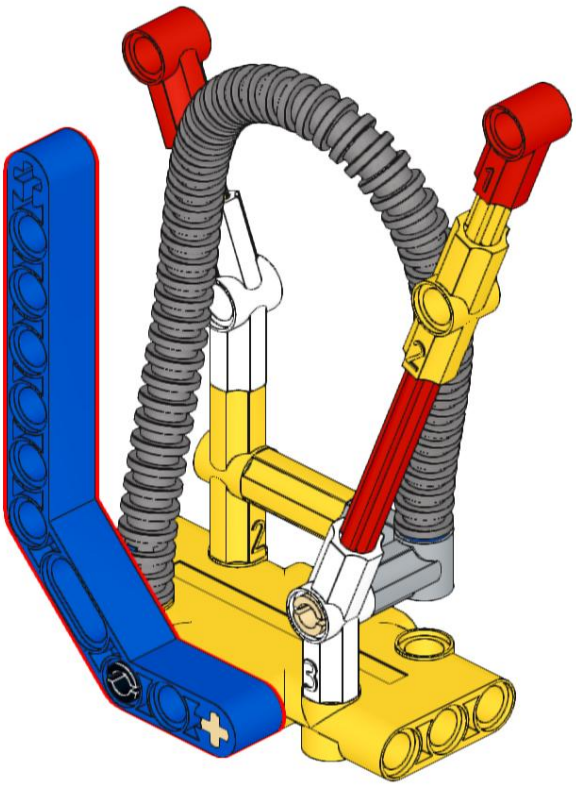

17

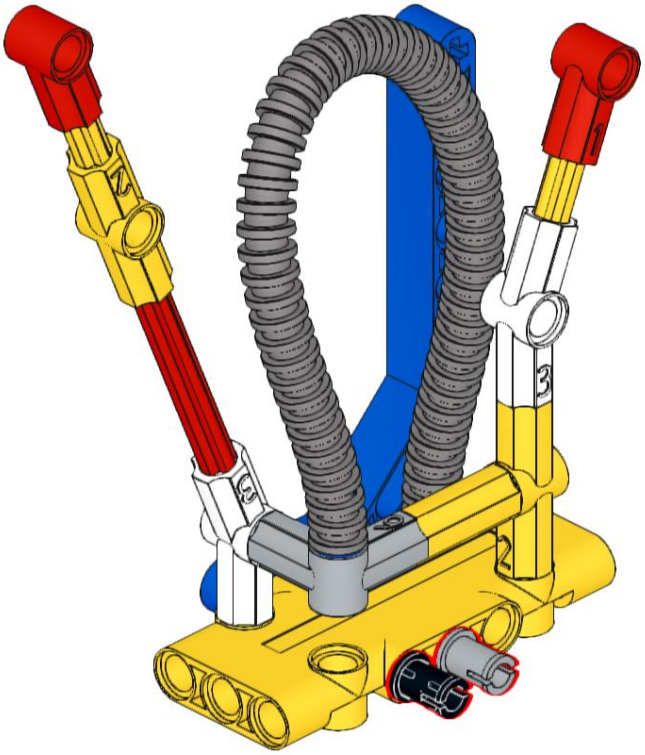

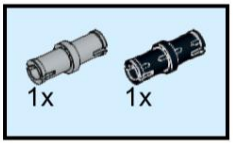

18

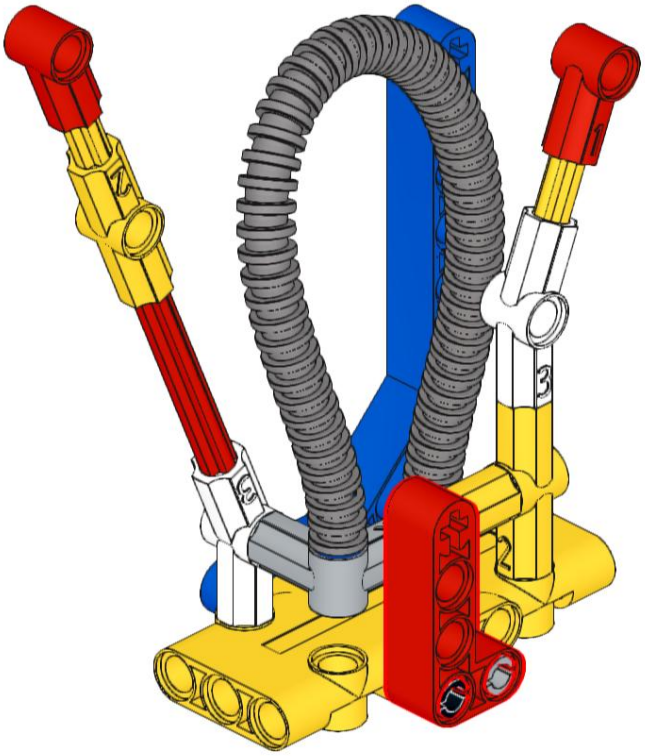

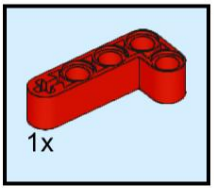

19

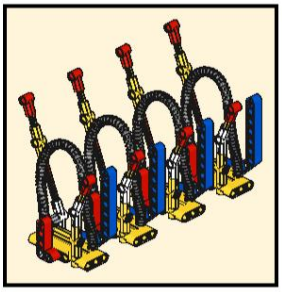

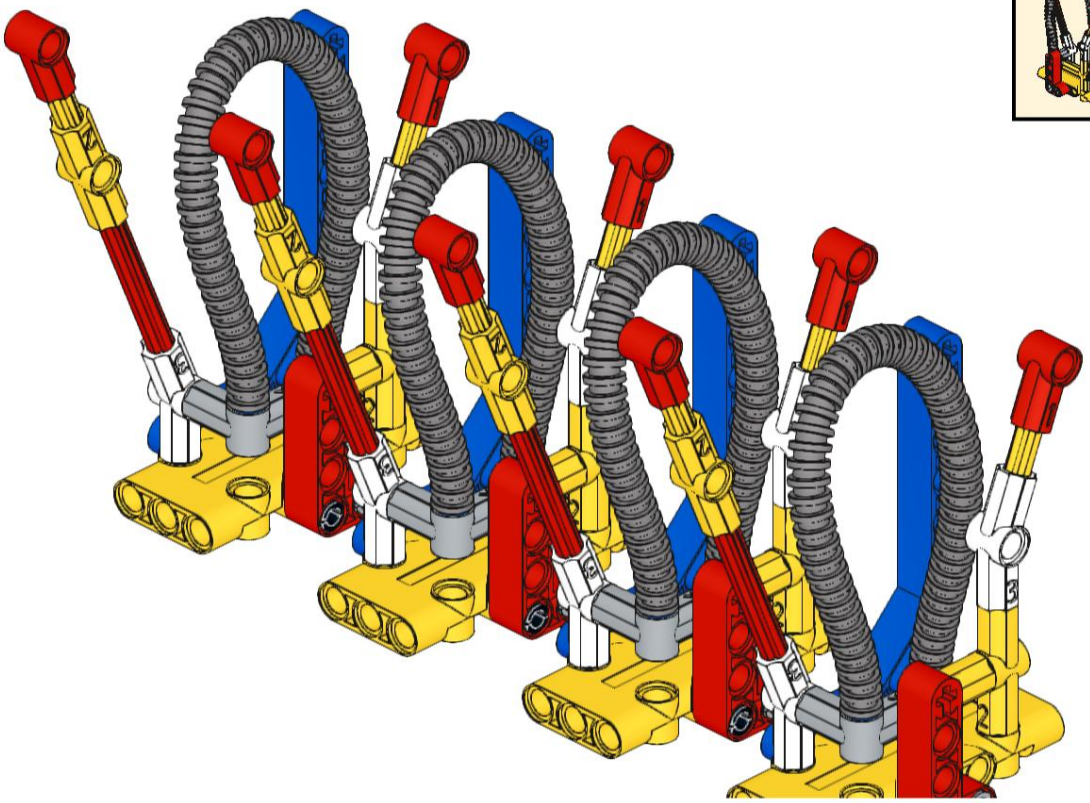

20

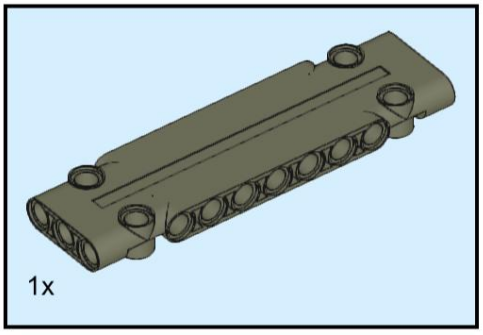

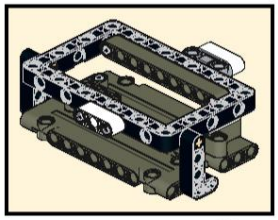

2x

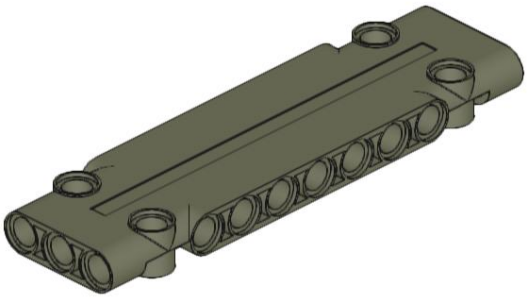

21

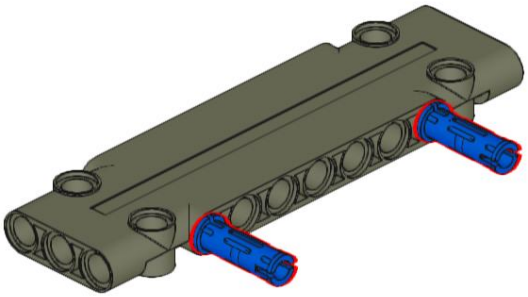

22

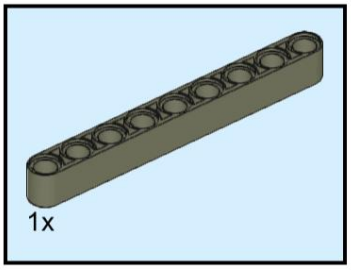

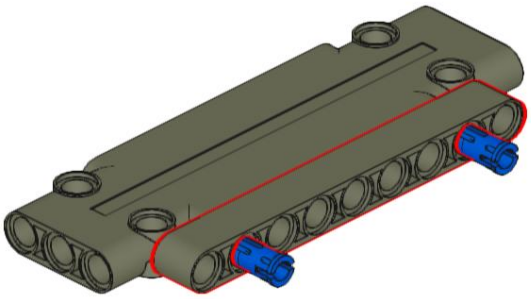

23

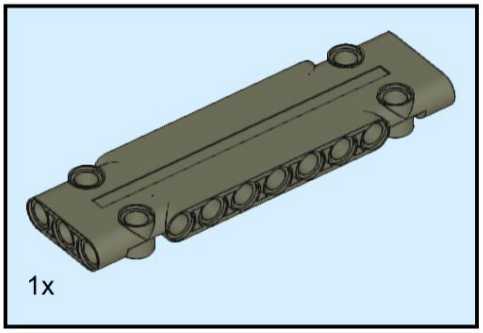

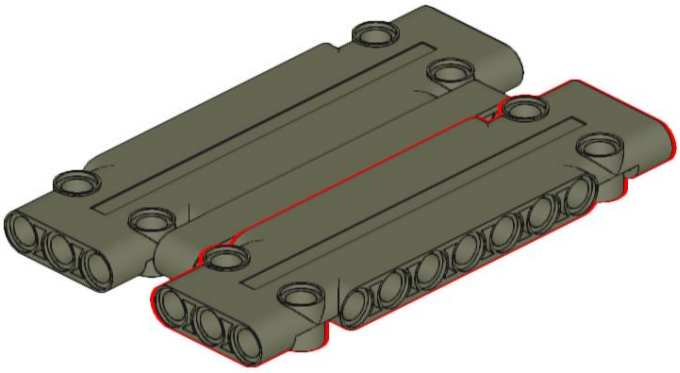

24

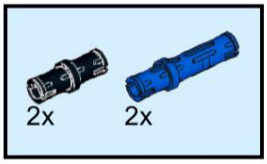

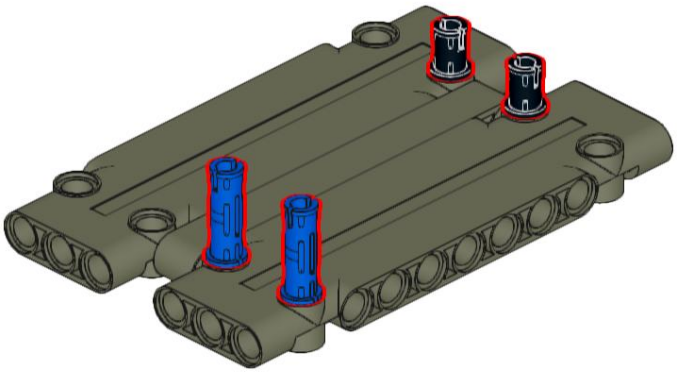

25

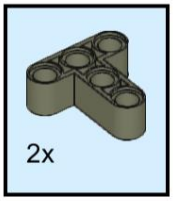

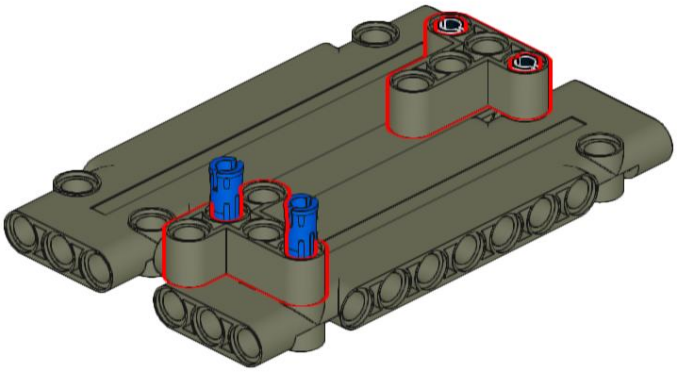

26

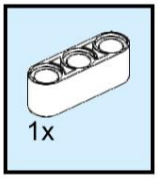

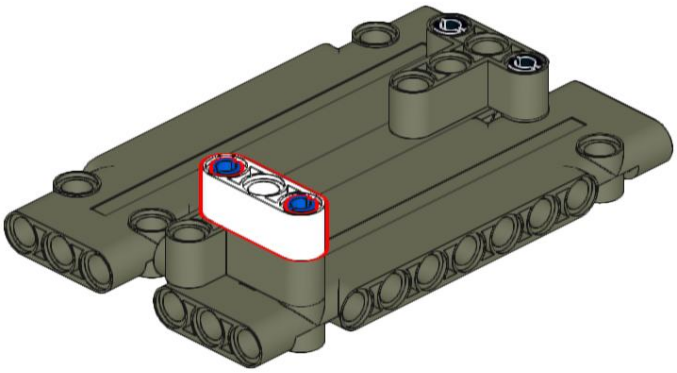

27

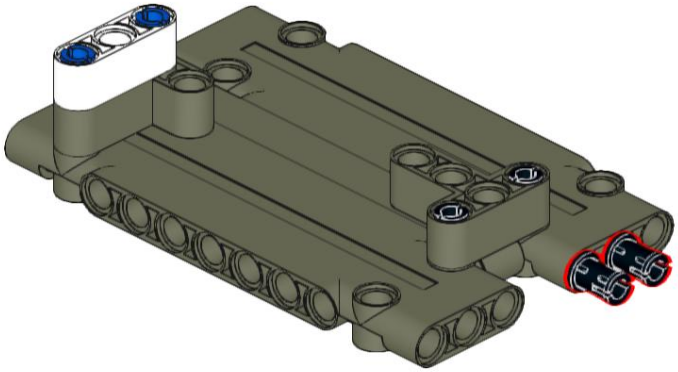

28

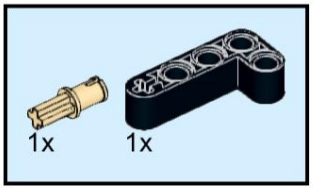

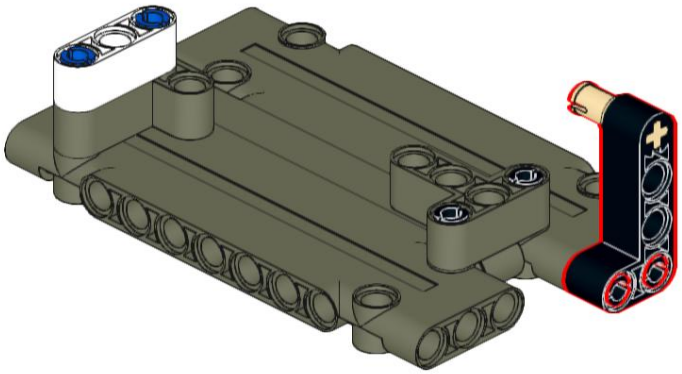

29

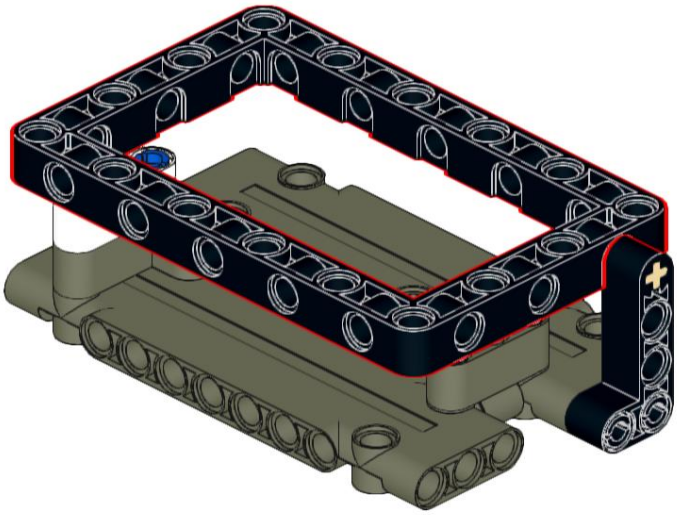

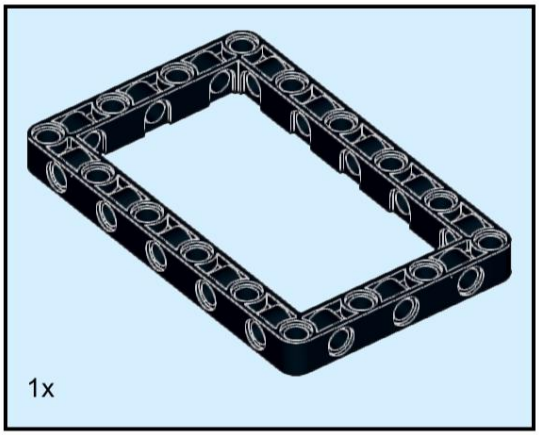

30

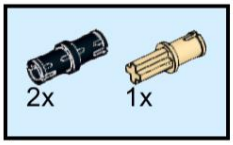

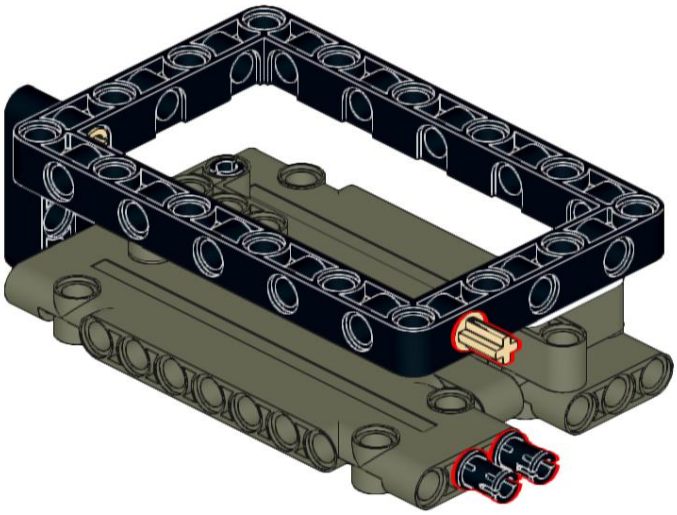

31

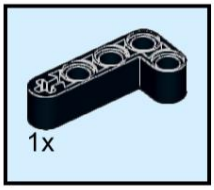

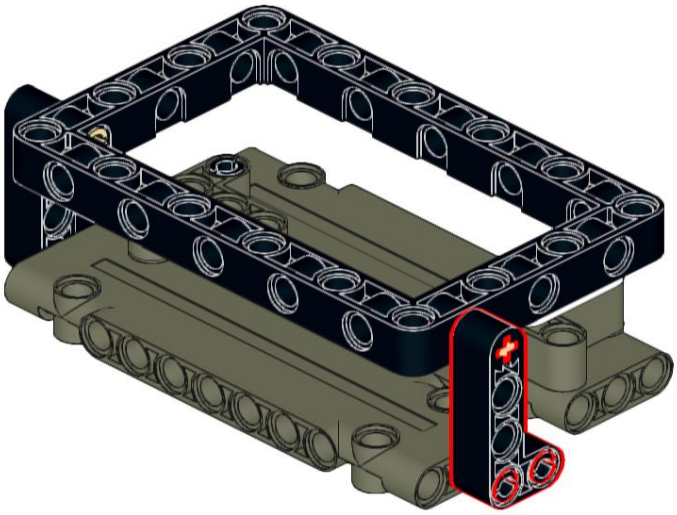

32

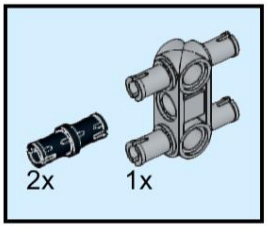

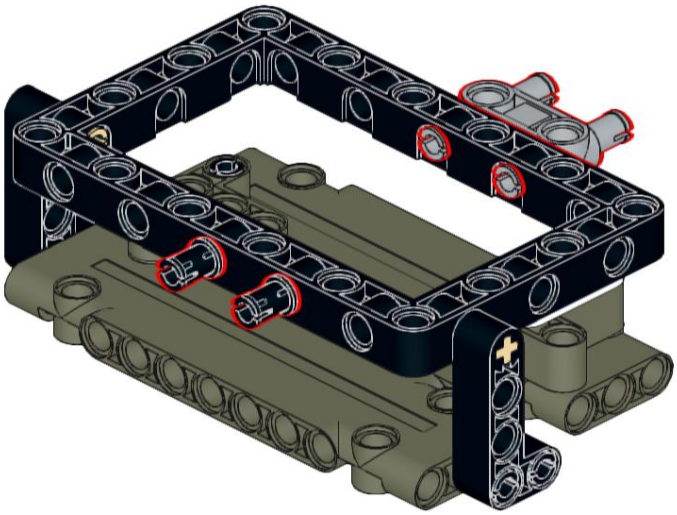

33

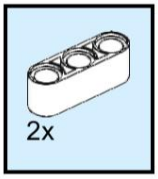

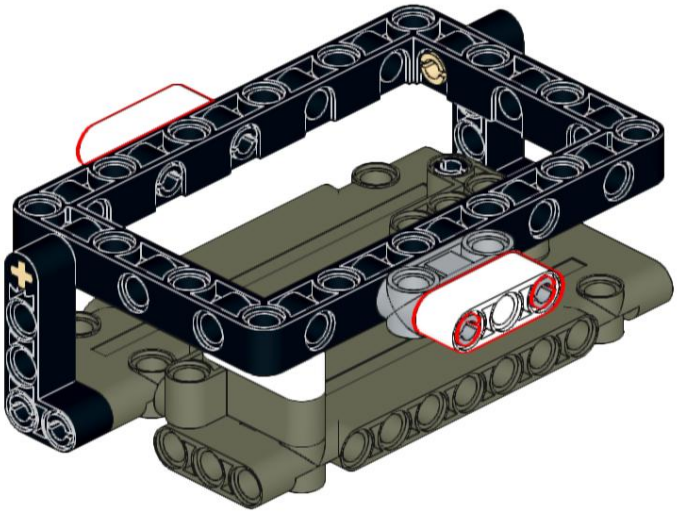

34

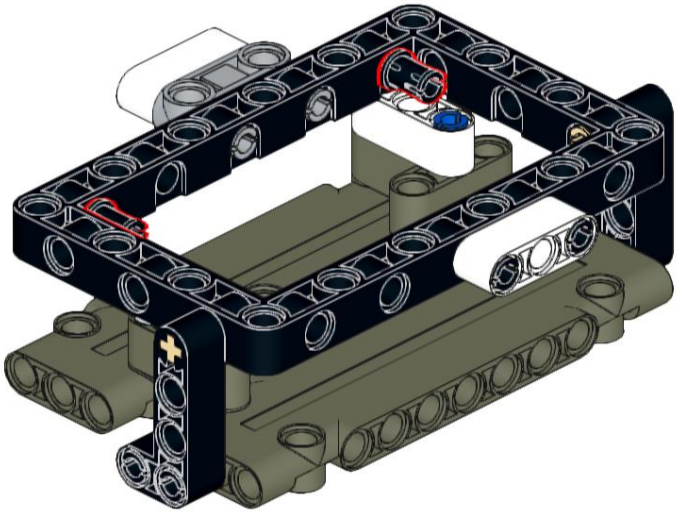

35

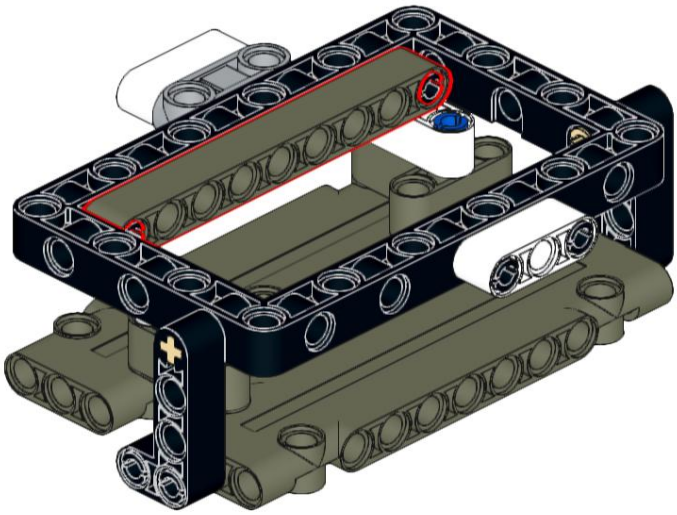

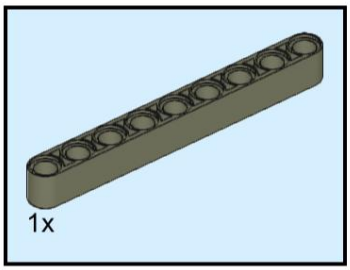

36

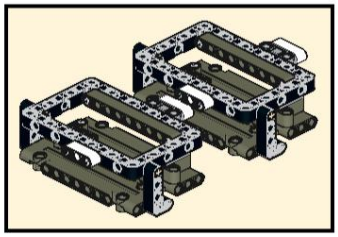

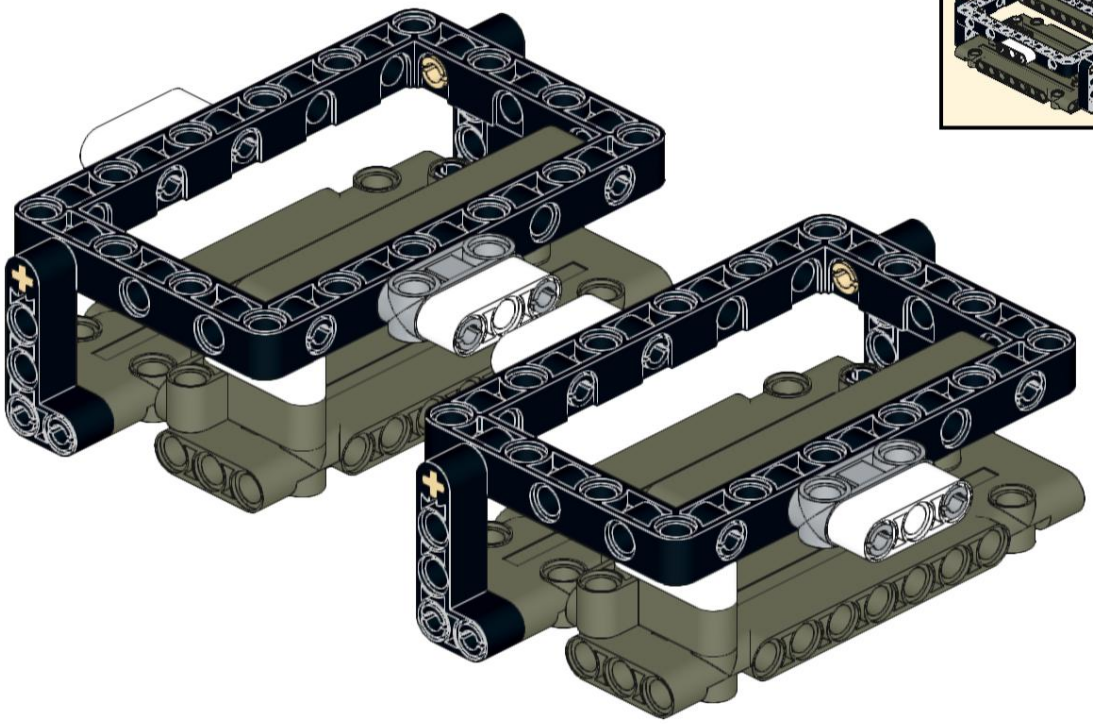

37

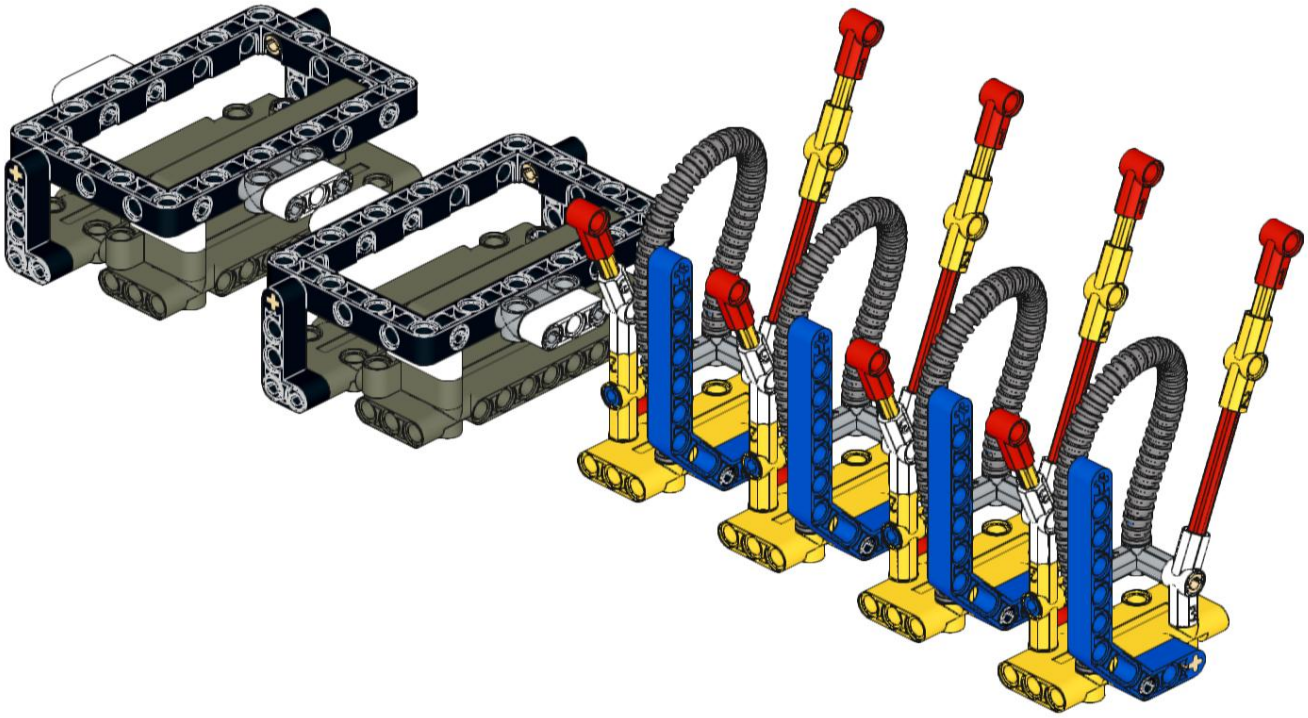

38

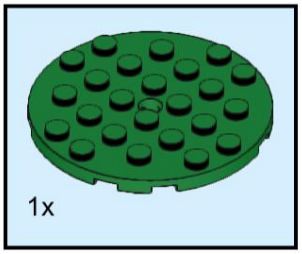

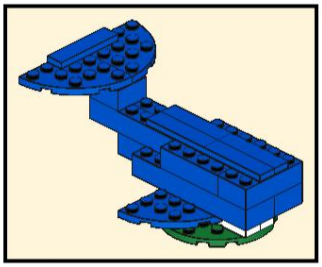

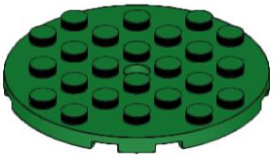

39

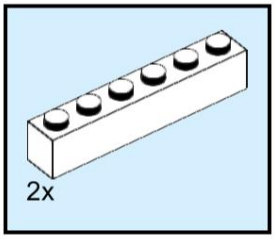

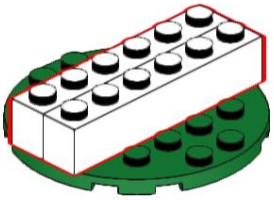

40

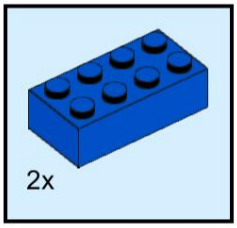

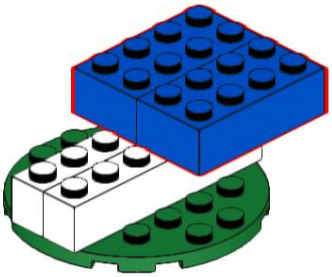

41

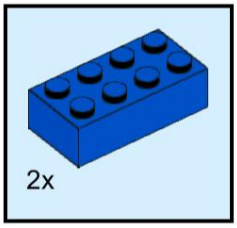

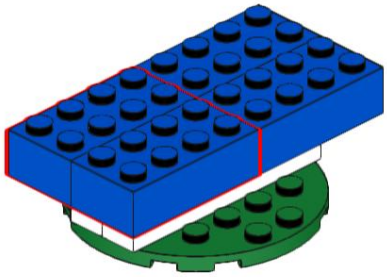

42

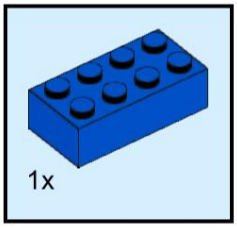

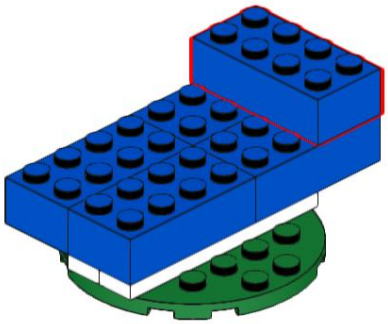

43

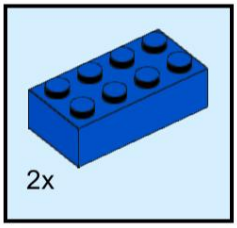

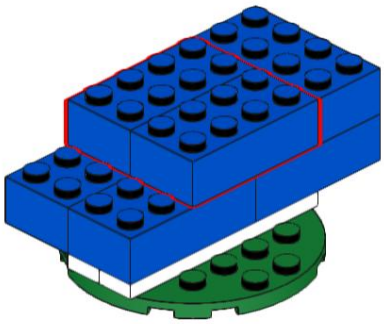

44

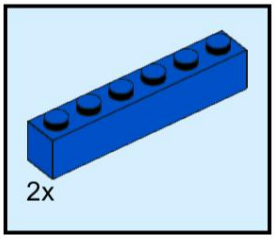

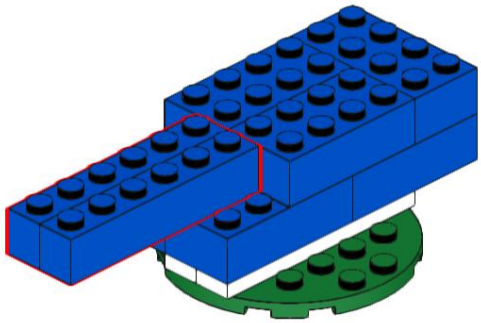

45

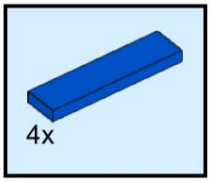

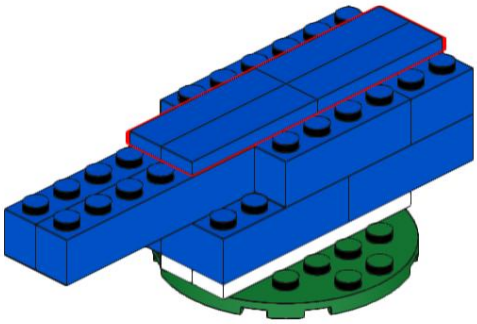

46

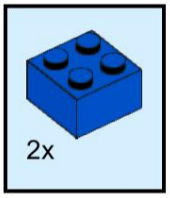

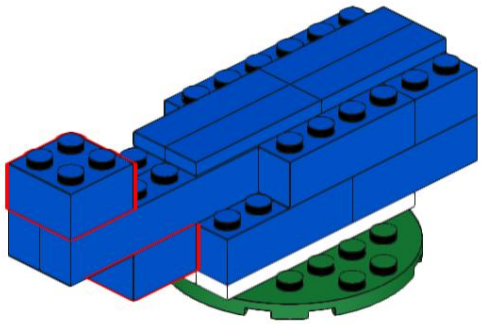

47

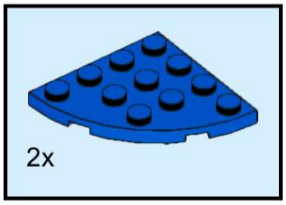

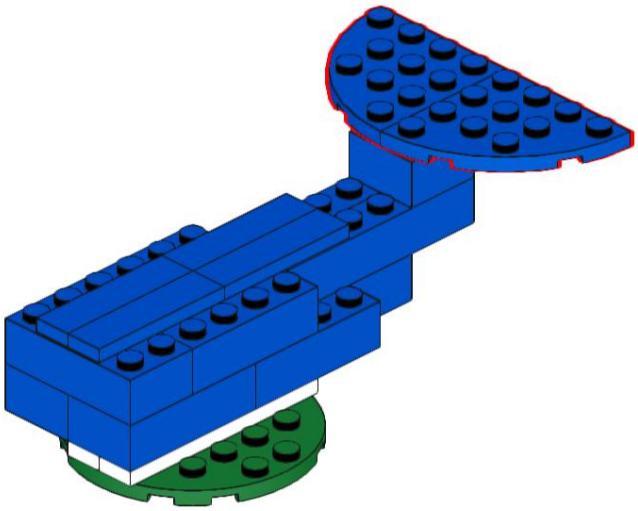

48

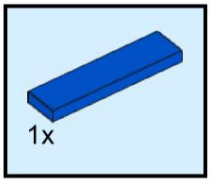

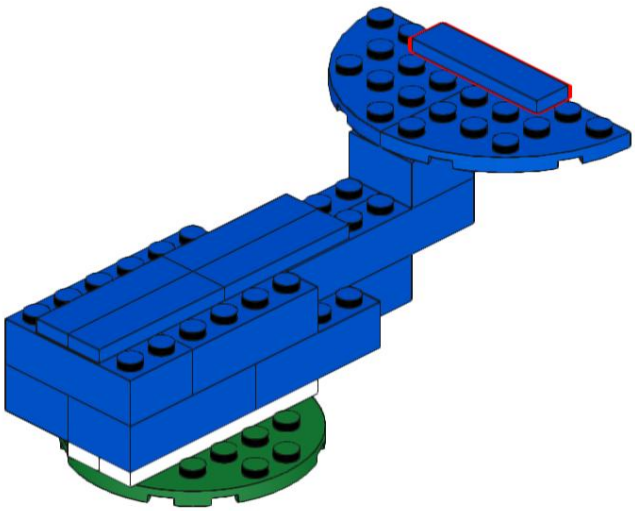

49

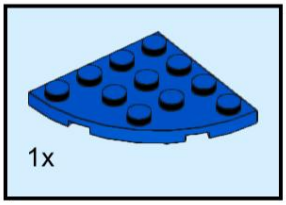

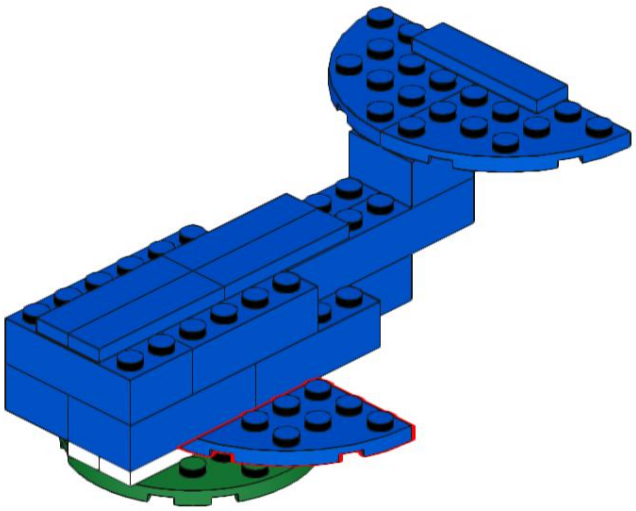

50

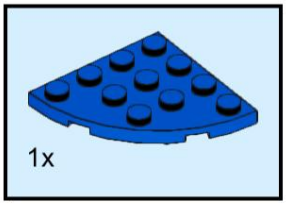

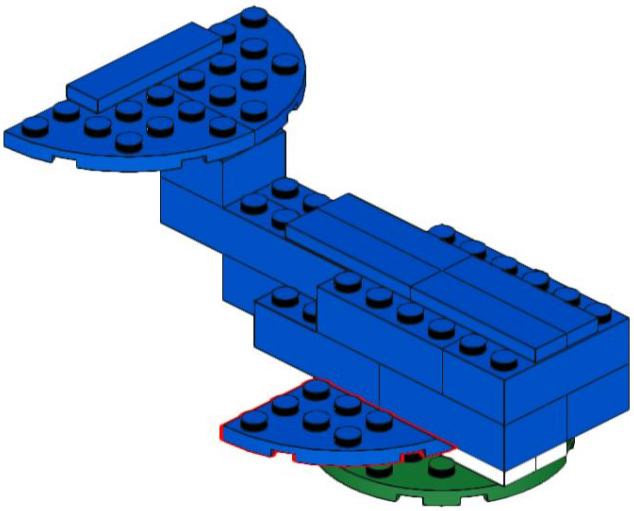

51

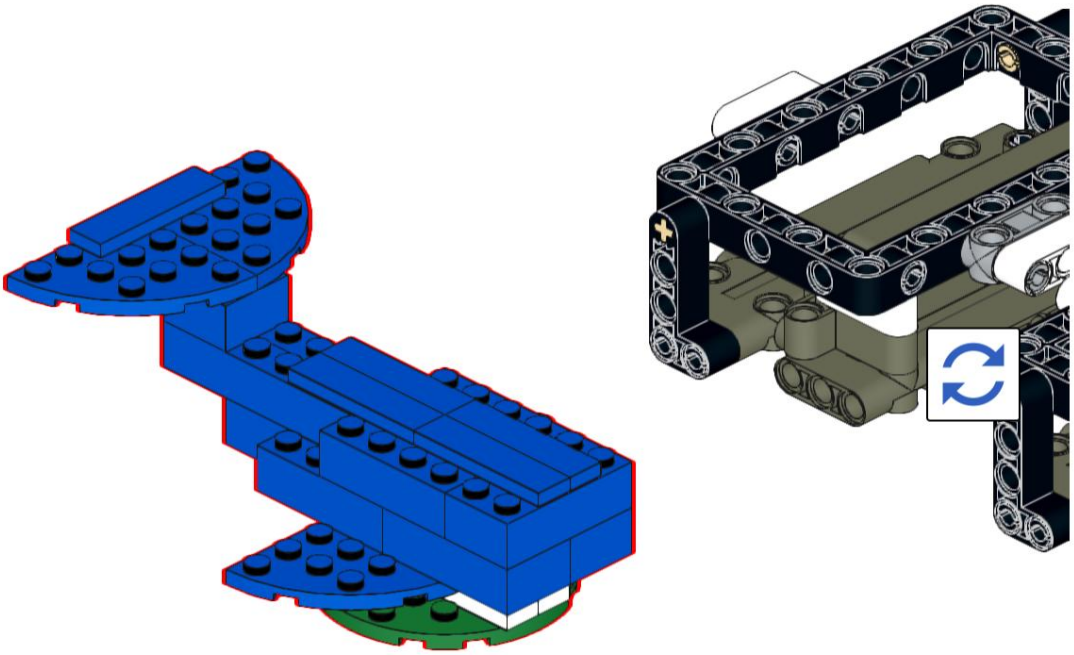

52

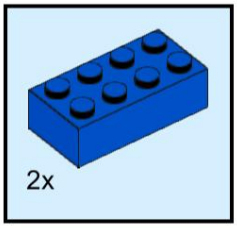

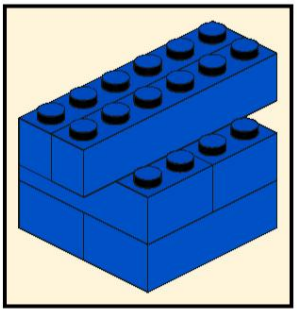

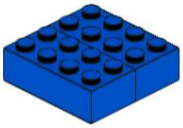

53

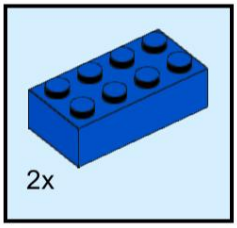

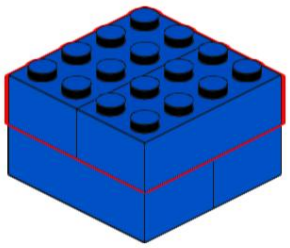

54

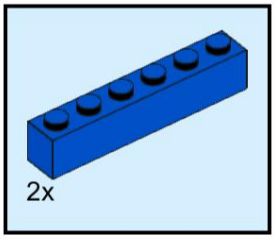

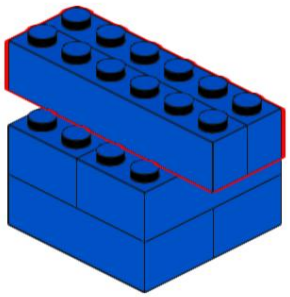

55

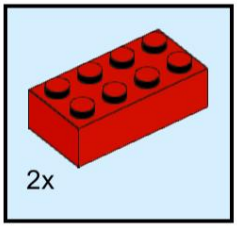

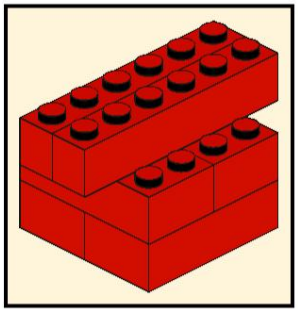

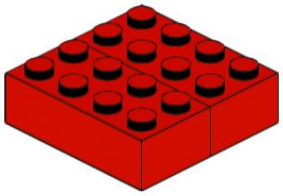

56

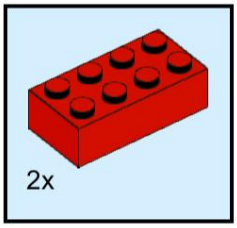

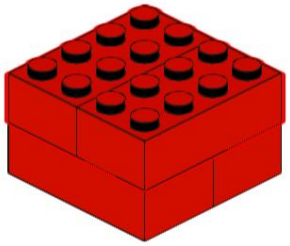

57

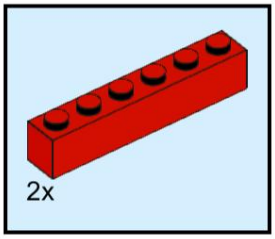

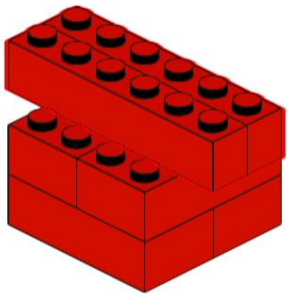

58

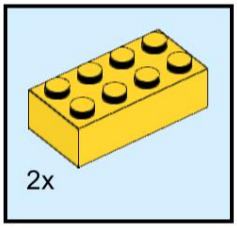

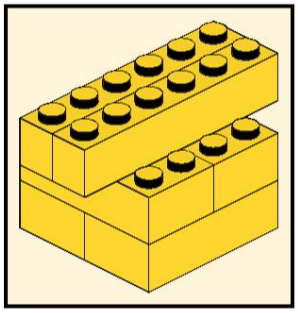

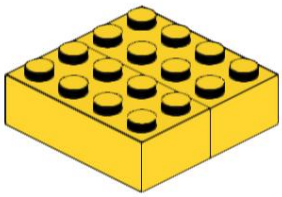

59

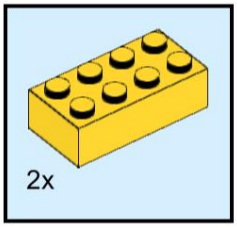

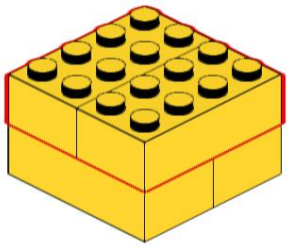

60

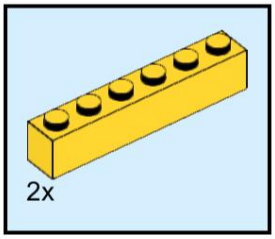

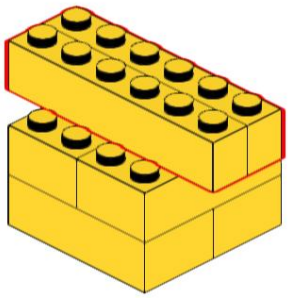

61

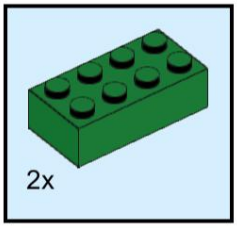

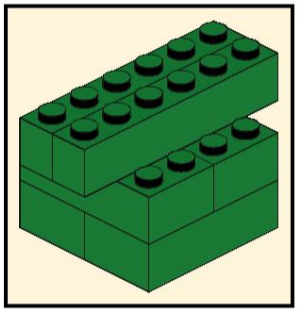

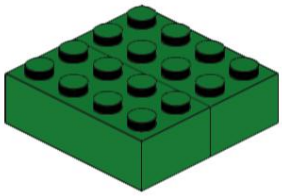

62

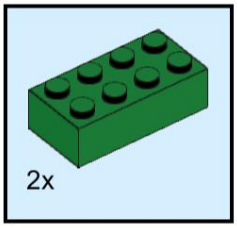

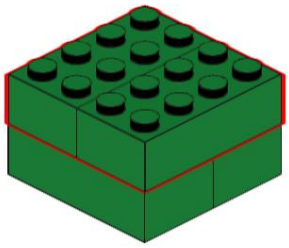

63

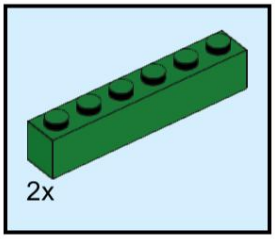

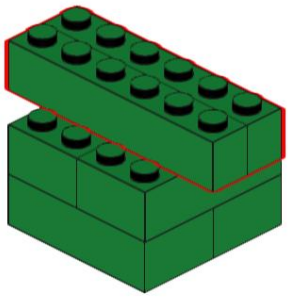

64

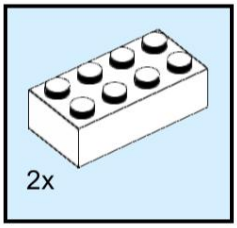

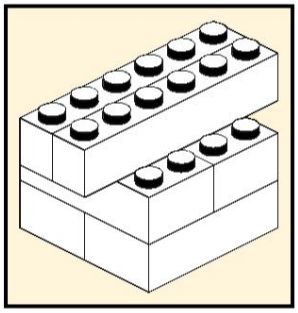

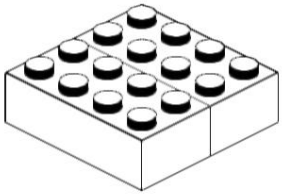

65

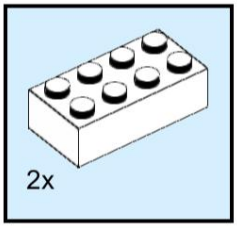

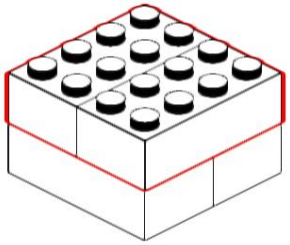

66

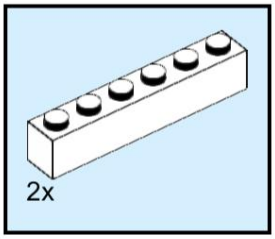

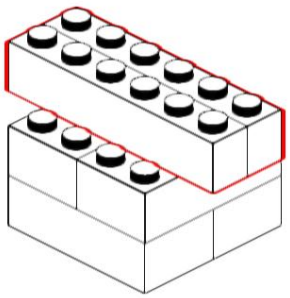

67

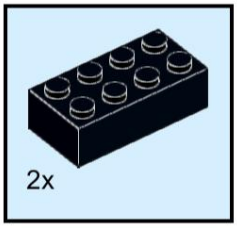

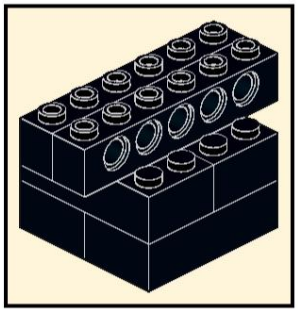

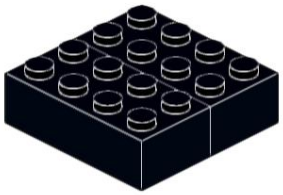

68

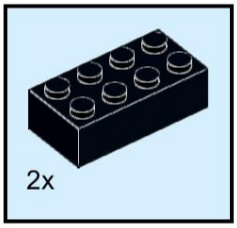

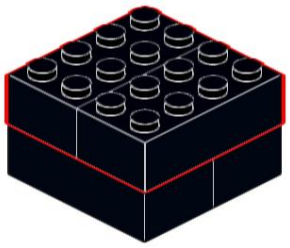

69

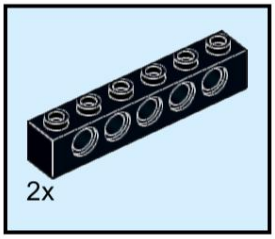

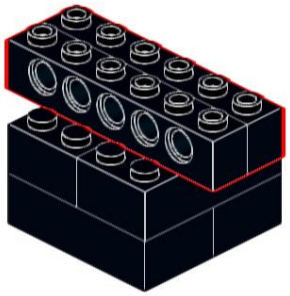

70

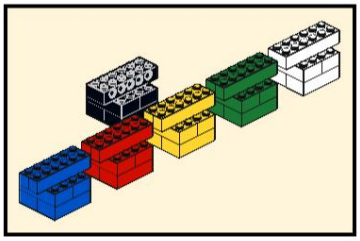

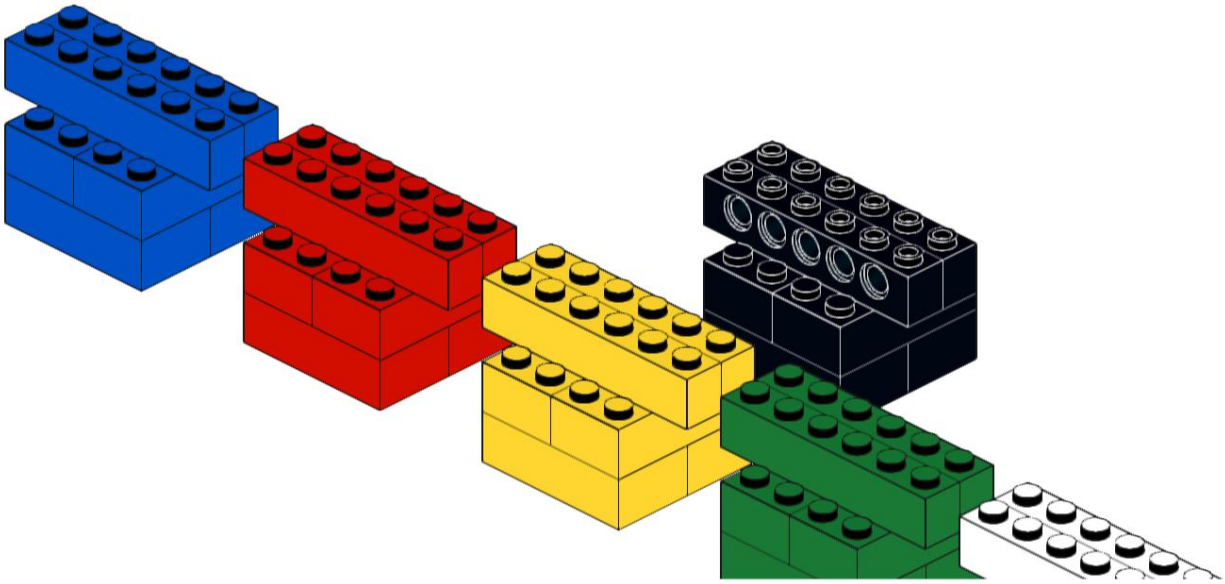

71

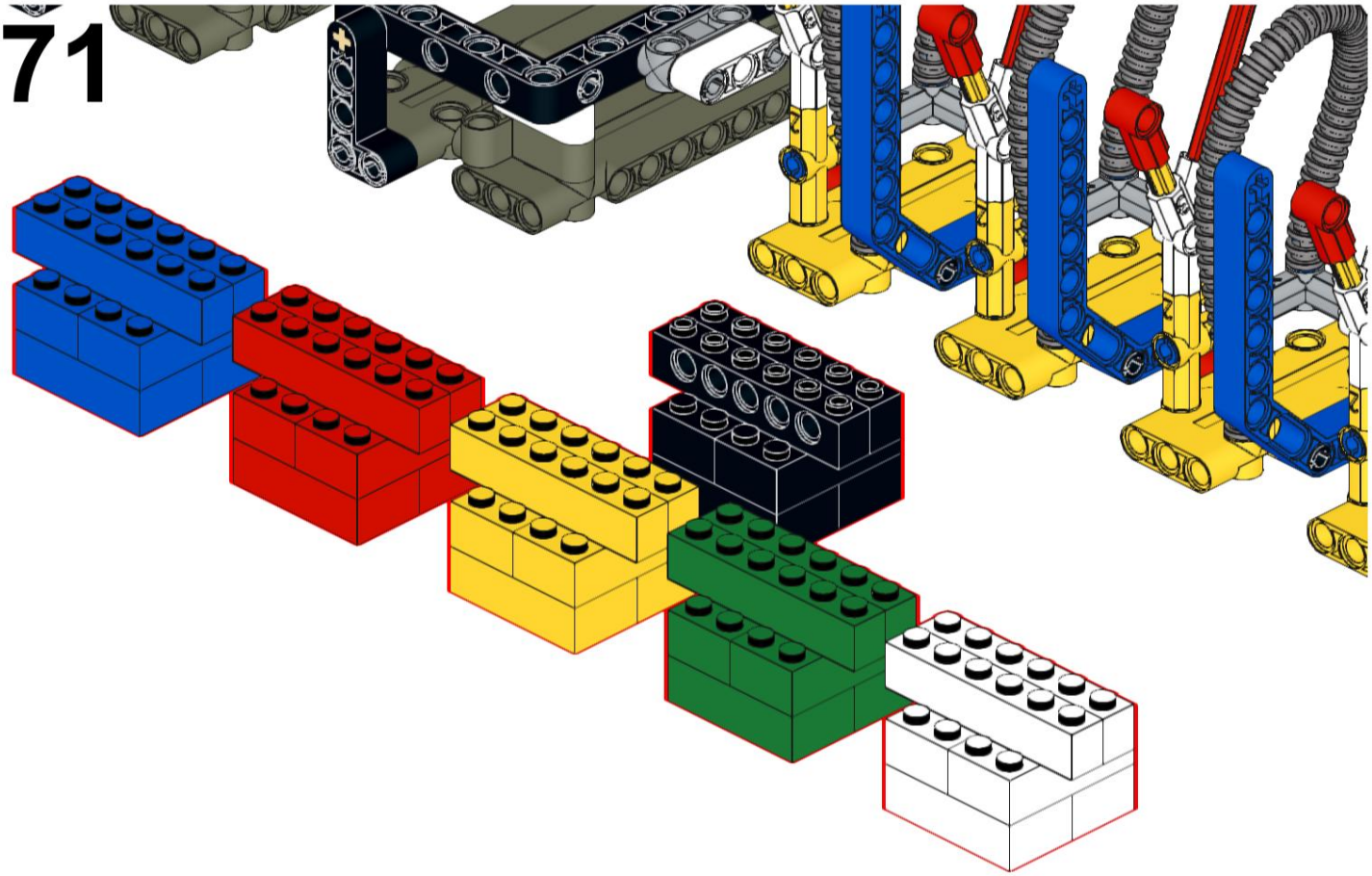

72

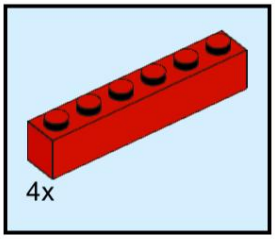

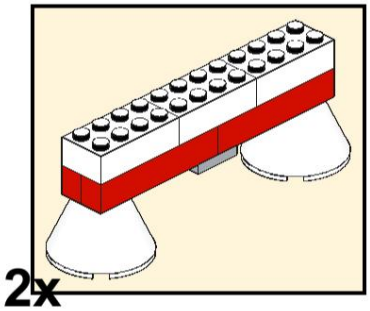

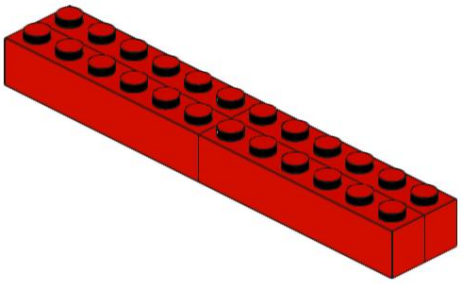

73

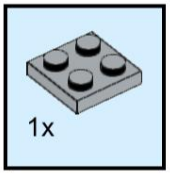

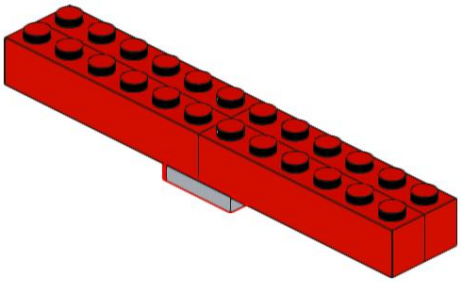

74

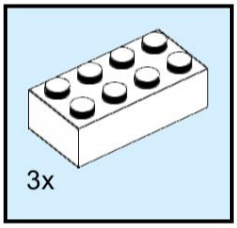

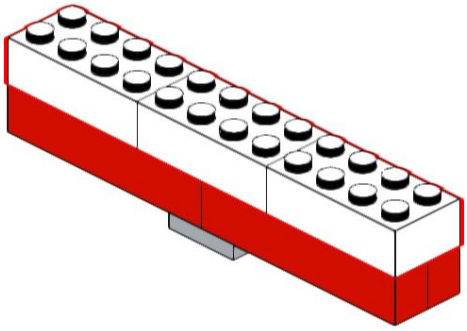

75

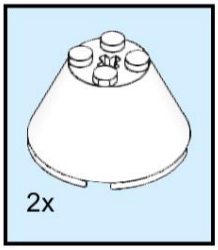

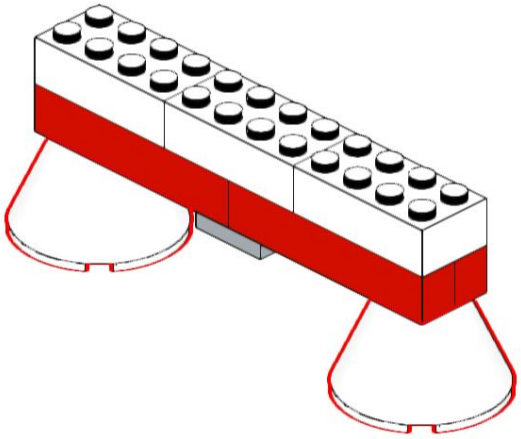

76

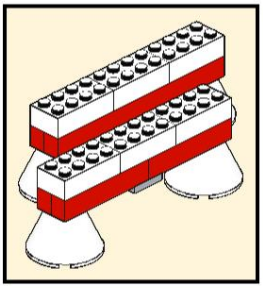

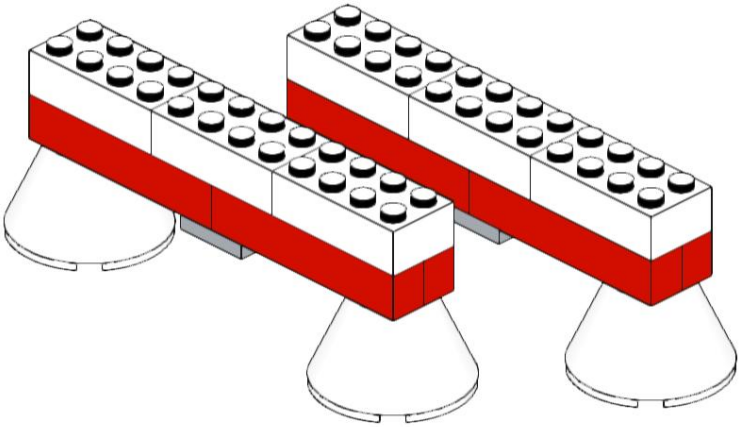

77

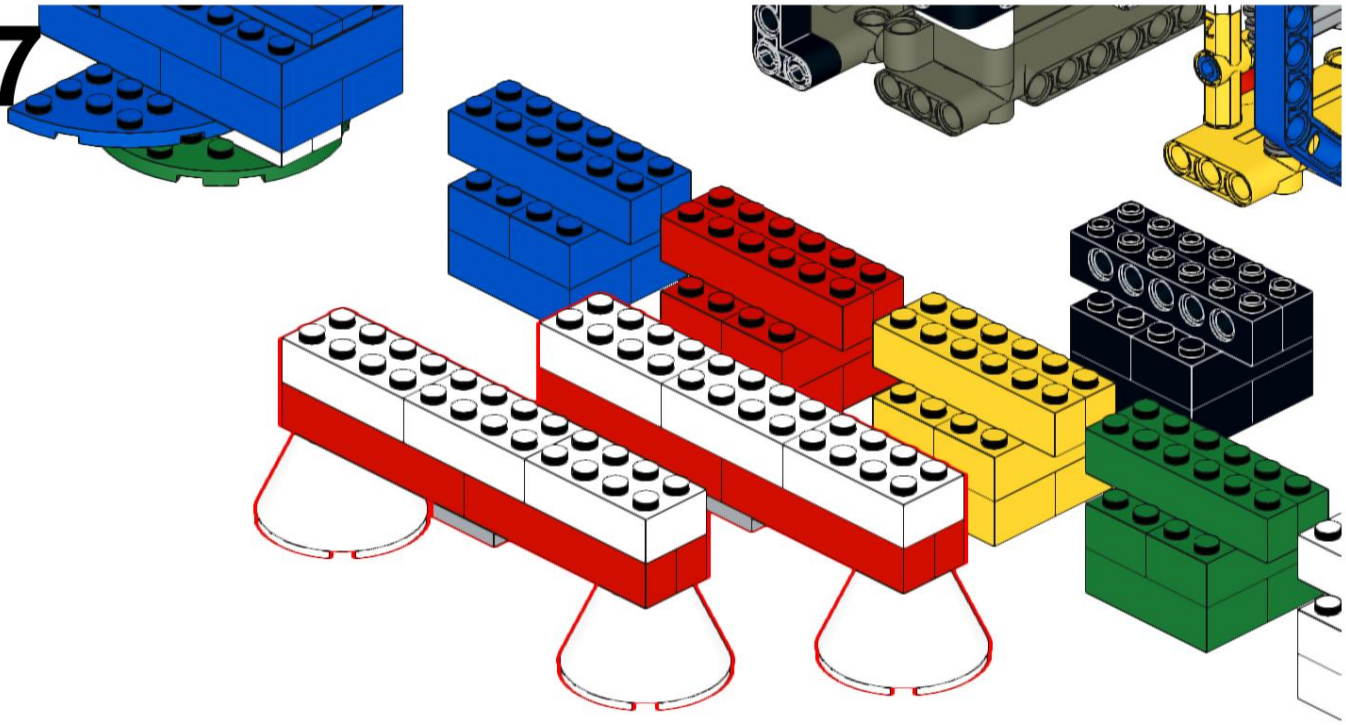

78

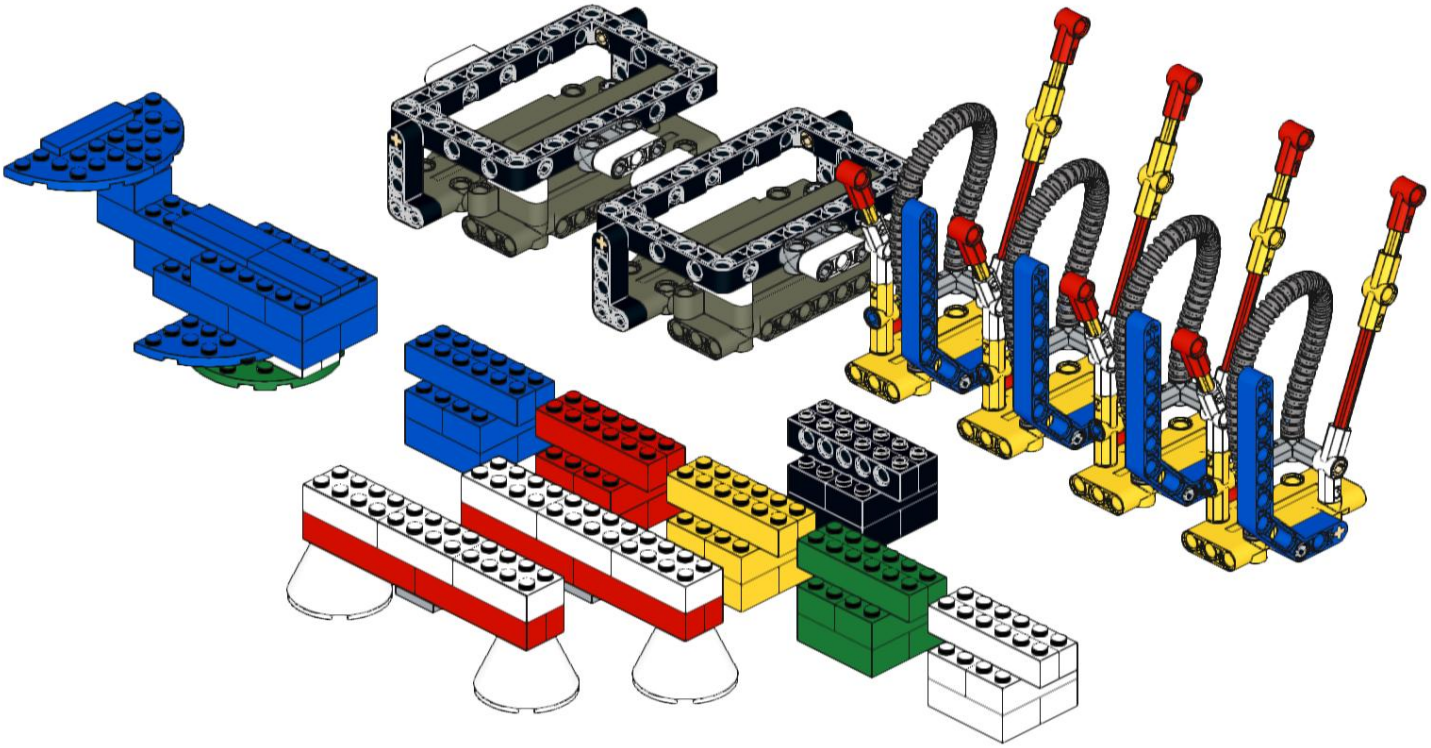

79

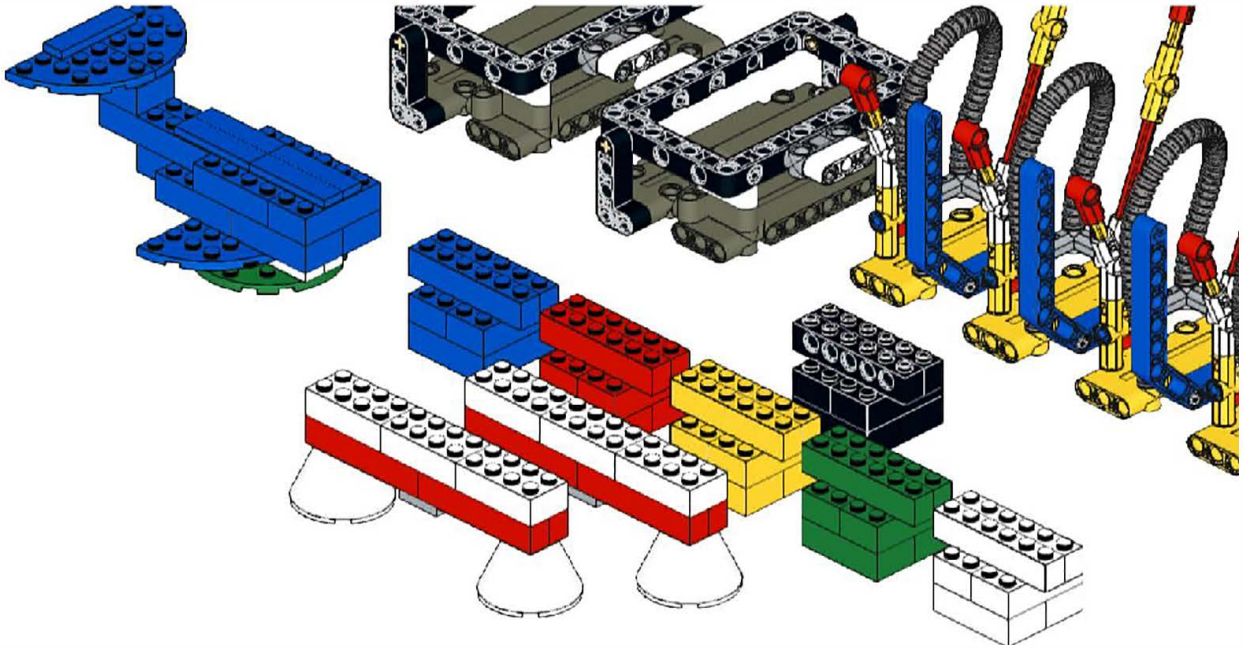

28x
2780
Black

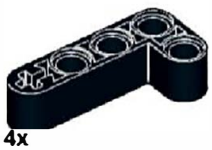

4x
32140
Black

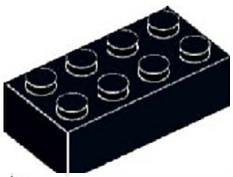

4x
3001
Black

2x
3894
Black

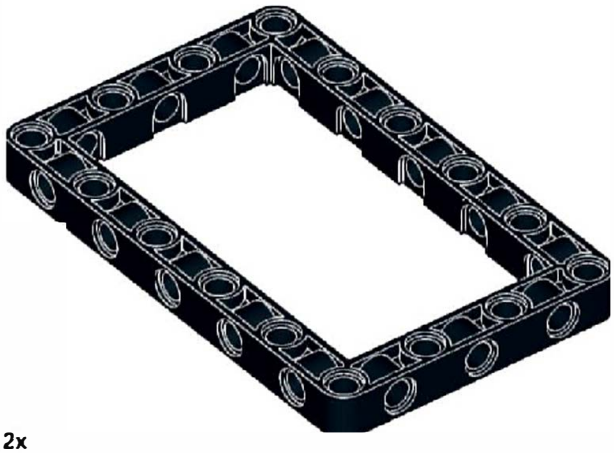

2x
39794
Black

4x
60484
Dark Gray

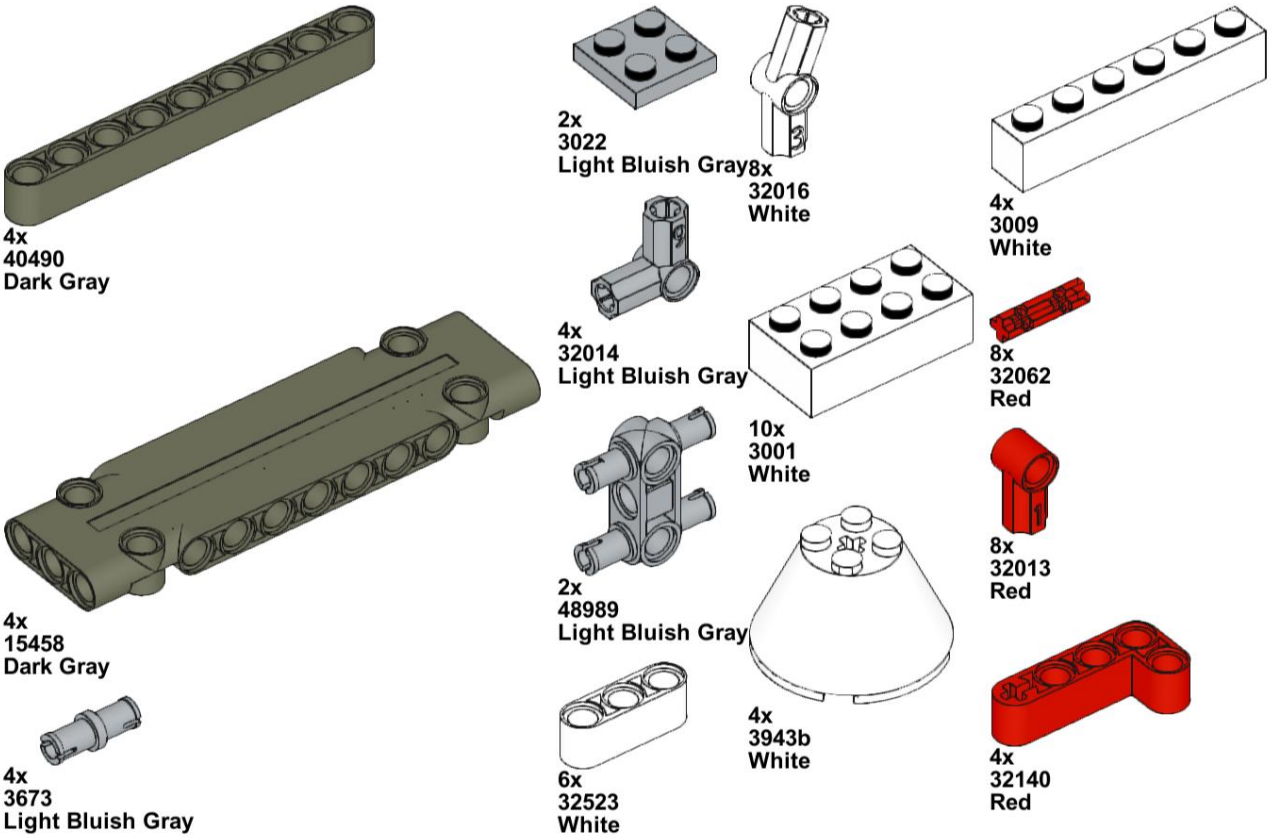
4x
40490
Dark Gray
2x
3022
Light Bluish Gray
8x
32016
White
4x
3009
White
4x
32014
Light Bluish Gray
10x
3001
White
8x
32062
Red
4x
15458
Dark Gray
2x
48989
Light Bluish Gray
8x
32013
Red
4x
3673
Light Bluish Gray
6x
32523
White
4x
3943b
White
4x
32140
Red

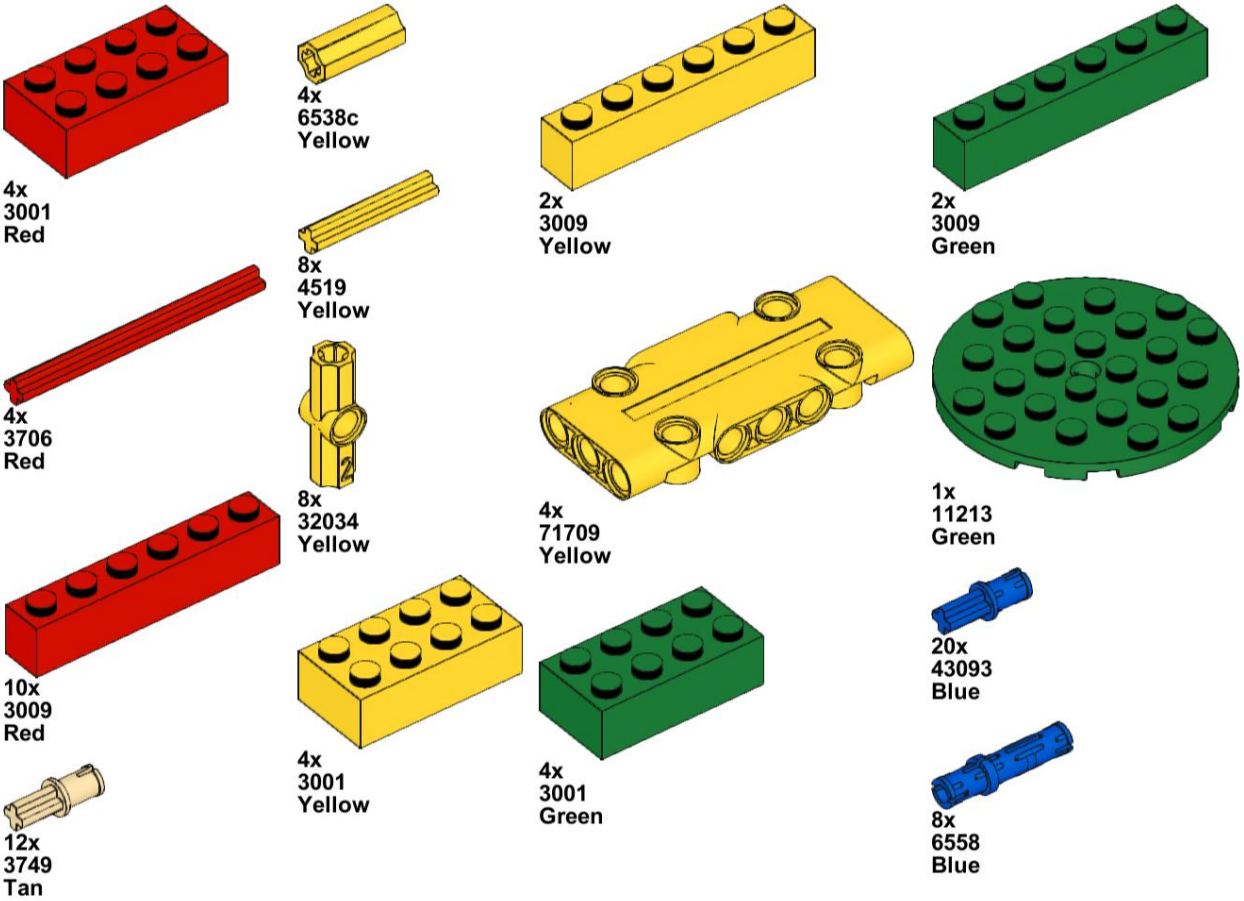
4x
3001
Red
4x
6538c
Yellow
2x
3009
Yellow
2x
3009
Green
8x
4519
Yellow
4x
3706
Red
8x
32034
Yellow
4x
71709
Yellow
1x
11213
Green
10x
3009
Red
4x
3001
Yellow
4x
3001
Green
20x
43093
Blue
12x
3749
Tan
8x
6558
Blue

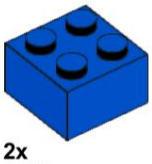

2x
3003
Blue

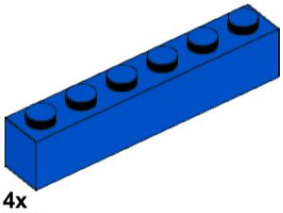

4x
3009
Blue

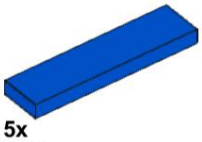

5x
2431
Blue

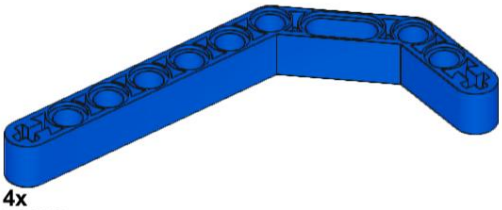

4x
32009
Blue

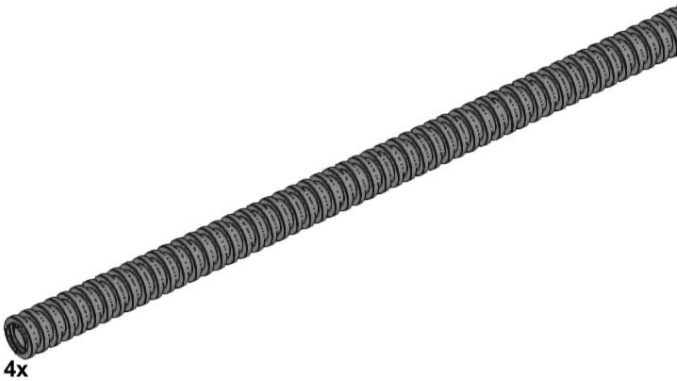

4x
78c18
Flat Silver

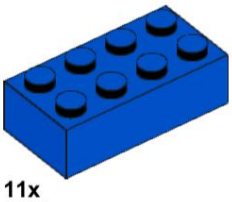

11x
3001
Blue

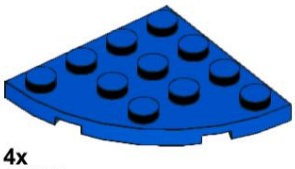

4x
30565
Blue